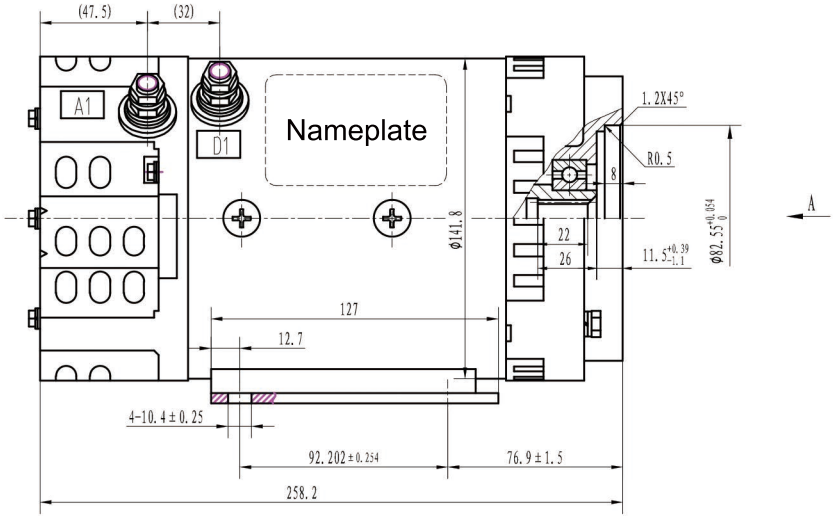

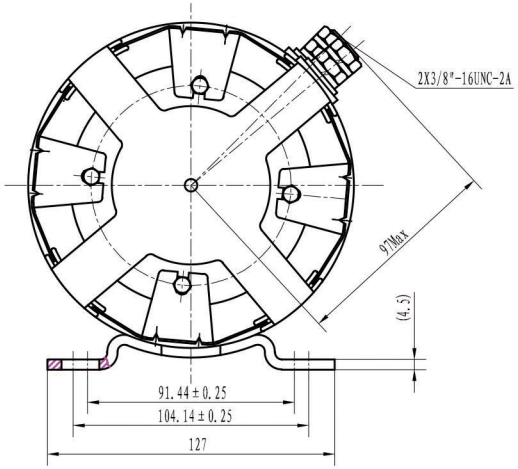

Direction A

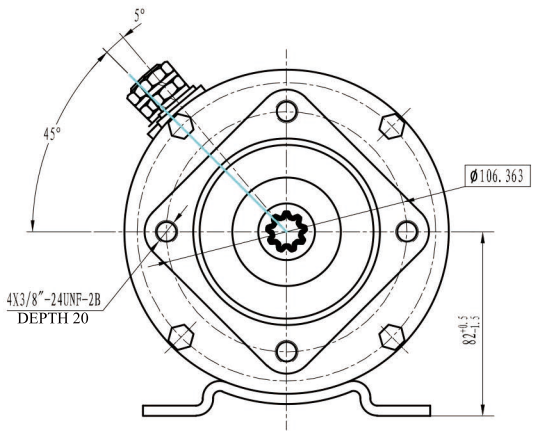

Characteristics

1. power rate: 2.6 kW
2. duty: 5 min
3. exciting: series
4. rated voltage: 48V
5. rated current: 72A
6. speed: 2450 rpm
7. max. speed: 5600 rpm
8. weight: 14.5 kg
9. insulation: class H
10. ingress protection: IP20

Standard: JB5335-91
Rotation: clockwise, view from shaft end

Flat Root Involute Internal Splines

Name	Code	Description
Gear Root Form		Flat
Geer Mating Type		Side Mating
Diametral Pitch	DP	16/32
Teeth	Z	9
Pressure Angle	α	30°
Pitch Circle Diameter	D	Φ14.2875
Stand-Off Error	X	0
Max. Diameter	Dei	Φ16.535-Φ16.598
Min. Diameter	Dii	Φ12.929-Φ12.942
Tolerance Grade & Mating Type		5H
Spacewidth Max	E	2.560
Spacewidth Min	E	2.494
Needle measurement	MR	10.088-10.159 (2-needle)
Needle Diameter	d	2.743

标记	处数	更改文件号	签字	日期
设计		标准化		图样标记	重量	比例
校对						1:1
审核						
工艺		批准		第 页	共 页

www.noco-evco.com

5BCG52HA100

OKQ.300.139